IJNRD.ORG ISSN : 2456-4184
INTERNATIONAL JOURNAL OF NOVEL RESEARCH AND DEVELOPMENT (IJNRD) | IJNRD.ORG
An International Open Access, Peer-reviewed, Refereed Journal

ADVANCED FIRE FIGHTING ROBOT WITH ALERTING SYSTEM USING ARDUINO UNO

Dr.Vijayakumar S[1], Devadharshini M[2], Indhumathi S[3], Jeevitha M [4]
Head of the Department, Department of Electronics and Communication Engineering,
Paavai Engineering College,Namakkal,Tamil Nadu, India[1]
UG Student, Department of Electronics and Communication Engineering,
Paavai Engineering College,Namakkal,Tamil Nadu,India[2]
UG Student, Department of Electronics and Communication Engineering,
Paavai Engineering College, Namakkal, Tamil Nadu,India[3]
UG Student, Department of Electronics and Communication Engineering,
Paavai Engineering College,Namakkal, Tamil Nadu,India[4]

Abstract: This project is prepared to evolve a fire fighting robot using RF control technique for faraway. The robotic vehicle is filled with water tanker and a pump which is restrained over wireless communication to throw water. An 8051 series microcontroller is used for the desired activity. This mobile robot is restrained using a mobile phone and outstretch fire at the transmitting end using push button, commands are enabled to the receiver to control the movement of the robot either to moved forward, backward and left or right. At the target end four dc motors are interfaced to the microcontroller. Further project improved by computing it with a wireless technology.

Keywords: Fire Fighting Robot, Extinguisher, Building, Buzzer

I. INTRODUCTION

One of the most significant framework in fire holocaust is life, i.e. lives lost in saving anyone else life. It is sometimes notpossible for fire-fighters personnel to enter the site of a fire because of inflammable materials, smoke, and dominant temperatures. A fast response to determine the fire can deflect many disastrous things. It is followed that fire can take place at household as well as at industrial level. A normal spark can generate a enormous fire breakout. Not only lives of industrial people but also the lives of domestics people is at risk because of low fire management system. Fire can kills many lives and can damage many

people for their life span. But it can be keep away from using proper fire limit methods. The starting point of Fire Accidents For such environments, fire-fighting robot is suggested. In today's generation a lot of robots are proposed and planned to take out the human factor from risk and harmful work. The use of robots is becoming very common that safely fills the labour comprehensive or deadly work for human beings. A Fire Extinguishing Robot is derived on IOT Technology.

In Fire Extinguishing robot, we contemplate to construct a system that could quench a small flame by perceiving and operating to the location itself. It will impulsively find the fire with the help of flame sensors. Once it finds the fire evolve location, it crosses itself accordingly to come the fire blaze and impulse the fire by using built-in fire extinguishing system. For fire observation it is using three flame sensors. First one for the left way, second one for the forward way and third one for the right way. Fire extinguishing system will get triggered when fire detection system discovers fire. It then reaches the explode point and water pump will start throw the water when it detects fire. The key features of this system is to provide supervising of fire so that major fire accidents can be avoided and absence of human lives gets reduced.

Robot is a machine that resembles like a human being and carry out various complicated tasks. There are many types of robots such as fixed base robot, mobile robot, underwater robot, humanoid robot, space robot and medicine robot etc. In this paper a FIRE EXTINGUISHING ROBOT is proposed. This robot is qualified with a Bluetooth module used and supplied the signals to the microcontroller in order to activates the pump which splash water in order to put out the fire. This robot is inhibited using a mobile phone. This robot executes the concepts of environmental fire sensing, proportional motor control. The motor driver is used for the bidirectional control of the motors furnished in the robot. Every command for movement control is given to the robot with the help of Bluetooth.

.

II. LITERATURE SURVEY

DurgeshSharma. A fire eruption is a harmful act that leads to numerous consequences. Detecting a fire at an starting stage and extinguishing it can assist in prohibition of numerous accidents. Till now we depend on human resource. This frequently leads to risking the life of that person. Therefore, fire preservation becomes an significant phase to save human lives. In this paper a fire extinguishing robot has been suggested and planned

which detects the fire location and extinguish fire by using sprayers on activating the pump.

TawfiqurRakib. A fire outbreak is a hazardous act that leads to enormous significances. Detecting a fire at an starting stage and blow out it can support and prevention of various accidents. Till now we depend on human wealth. This often leads to compromising the life of that person. Therefore, fire safety becomes an significant feature to save human lives. In this paper a fire quenching robot has been suggested and designed which detects the fire blaze and quenching the fire by using sprayers on animating the pump.

Nitin R. This suggested model of Fire quenching Robot using Arduino used to find the presence of fire and quenching it spontaneously without the use of any human barriers. It consists of gear motors and motor driver to command the motion of robot when it detects any existence of fire and will automatically start the water pump to quench the fire breakout.

NikMd Hafizul HasmiMd Suhaimi. The security of home, laboratory, office, factory and building is essential to human life. We evolve an intelligent multi sensor based safety system that embraced a fire fighting robot in our daily life. The destructive burnt cause by electrical is the excessive source. It is due to security system can't detect irregular and hazardous situation and inform us. Besides, user had challenges to detect the small set fire to caused by electrical appliances. User may take more time to extinguish fire like searching the water source to extinguish fire when want to extinguish the fire.

M. A. Rashid Sarkar. **,** The robot have gas sensor for fire detection, gear motor and motor drive for the movement of robot, a bluetooth module to combine the robot along with the android device and to command along the robot with the smartphone. Water drain and sprayer is also used in this. To educate the Arduino UNO an open source software which is Arduino IDE is necessary to code and to execute that code in Arduino UNO.

III. SYSTEM DESIGN

a) Hardware Design Methodology

Robot is a machine that resembles a human being and performs various difficult tasks. There are many types of robots such as fixed base robot, mobile robot, underwater robot, humanoid robot, space robot and medicine robot etc. In this paper a FIRE EXTINGUISHING ROBOT is recommended. This robot is furnished with a Bluetooth module used and give the signals to the microcontroller in order to activate the pump which

sprays water in order to quench the fire. This robot is operated using a mobile phone. This robot executes the concepts of environmental fire sensing, proportional motor control. The motor driver is used for the bidirectional control of the motors equipped in the robot. Every instruction for movement control is given to the robot with the help of Bluetooth.

Fig 1 Block diagram

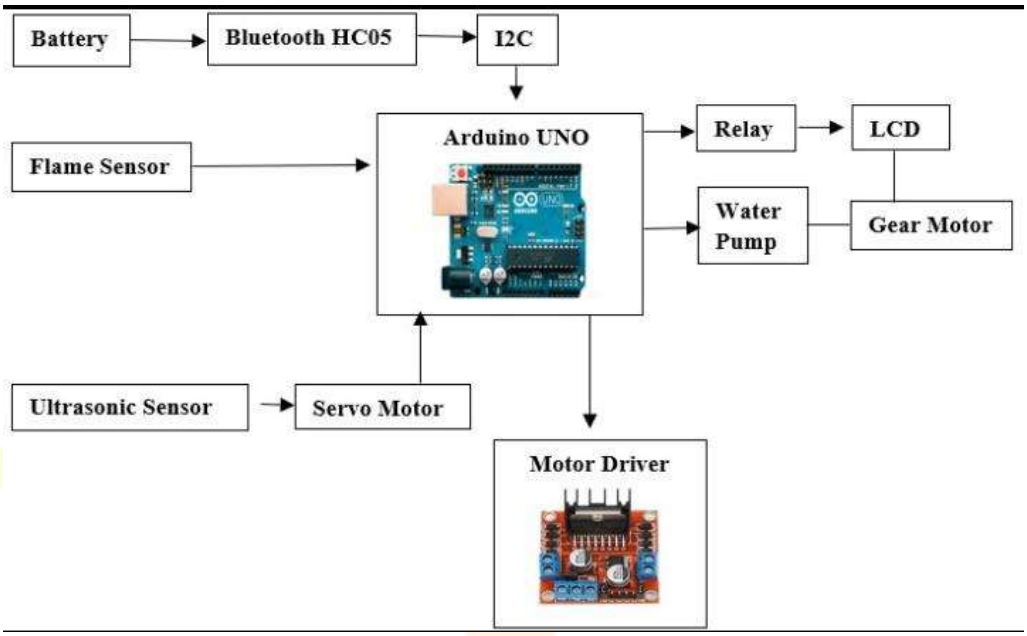

When the fire is found, it is quenched by water in the tank attached to the robot. But if the temperature of the fire site is above 40 degree celsius, the alarm will be ringing so that the operator can control the firefighting robot to go back and avoid the damage of it. This firefighting robot is explored to search for a fire in a small floor plan of a house, extinguish the fire and respond to the front of the house at last.

The arrangement of the proposed system is in the barrier avoidance model, the speed of a wheeled mobile robot is restrained by using fuzzy theory with sensor signals and permit to move to a pick out the location. The ultrasonic sensor is very small size and has a very high performance.

For the electronic circuit part, it consists Arduino Mega 2560,Ada fruit motor shield V2,Ultrasonic sensor, Flame sensor,9V DC water pump ,push-button and a HC-05 Bluetooth Module.

B) Hardware components:

1. ARDUINO UNO

Arduino is a original model (open-source) contingent on an safe and easy-to handle the hardware and software. It comprises of a circuit board, which can be designed (referred to as a microcontroller) and a commercial software called Arduino IDE (Integrated Development Environment), which is acclimated to write and transfer the computer code to the physical board.

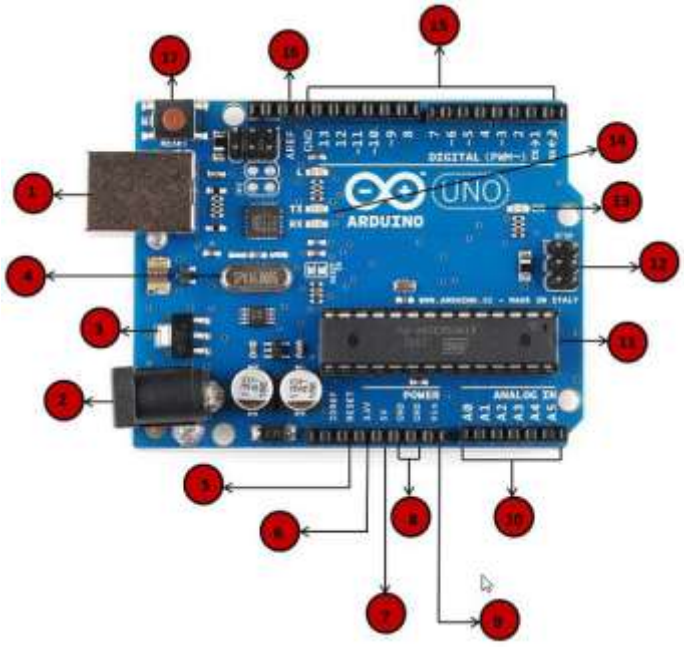

2. I2C

I2C stands for Inter-Integrated Circuit. It is a bus interface connection protocol integrated into devices for serial communication. It was initially provoked by Philips both Conductor and Insulator in 1982. In the recent years, it is a widely used protocol for short-distance communication.

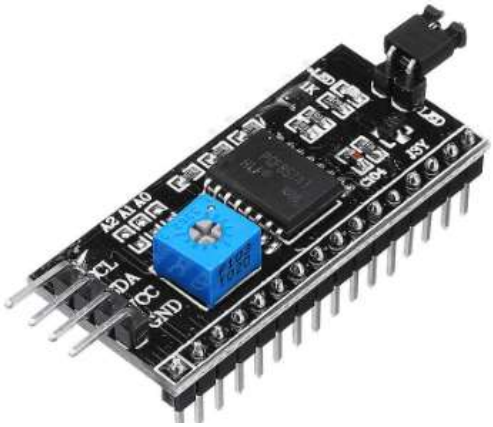

3.Gearmotor

A Gearmotor also known as geared motor is a Tiny electrical motor (Alternating Current induction, permanent magnet Direct Current, or brushless DC) sketched with an integral (non-separable) gear reducer (gearhead) attached. The safe gaurding on the drive end of the motor (light blue, below) is designed to gives a double function. The side facing the motor provides the armature/rotor relevance support and a carriage provision via which the integral rotor or armature shaft pinion moves.

The alternate side of the motor end shield gives multiple bearing supports for the gearing itself, and a fastening and growing provision for the gear housing (orange, below). In general, Gear motors working as a torque multipliers and speed reducers, demanding low motor power to operate a given load. The gear housing design, the gearing type, gear lubrication, and the specific mode of integration all impacts the Gearmotor performance.

4.ULTRA SONIC SENSOR

In industrial applications, an ultrasonic detection acclimates to detect hidden tracks, holes in metals, composites, plastics, ceramics, and for water level detection. For this use, the laws of physics which are mentioning the propagation of sound waves via solid materials have been utilised since ultrasonic sensors using sound instead of light for detection.

Sound waves can migrate through the mediums with specific velocity rely on the medium of propagation. The sound waves which are having high frequency speculate from boundaries and manufactures distinguishable echo patterns.

Highlights of an Ultrasonic Sensor

1.Intensity(Supply voltage): 5V (DC).

2. Supply current: 15mA.

3. Modulation frequency: 40Hz.

4. Output: 0 – 5V (Output high when obstacle detected in range).
5. Beam Angle: Max 15 degrees.
6. Distance: 2 cm – 400 cm.

5.LCD

LCD is used for the displayment of the status of the Robotic action.LCDs are available to release arbitrary pixel (as in a general-purpose computer display) or fixed pixel with deficient information essence, which can be displayed or isolated, such as announcing words, digits, and 7-segment displays, as in a digital clock.

3. 5V RELAY

The new KEYS 5V Relay Module is excellently constructed for Arduino application. It consists of three major pins, the VCC, Ground and Signal. It can composed of switch if the circuit and the load circuit have supply voltage. It is usually uses the load circuit is Alternating Current. It is a switch used to connect and secludes connection from the circuit using a circuit signal. It has red LED that switch on every time the coil is refreshed or the signal pin has a high input.

4. 12V BATTERY

A 12 volt battery is an irregular battery used in specific electronic applications. Of all the types of batteries, the 12 volt battery is one that resembles very different relying on its use. In some ways, it is one of the most distinctive of all batteries. It can be substantial or tiny, massive or light. In some cases, they may resembles nearly like regular AA batteries.

The sizes of 12 volt batteries vary widely based on the amp hours they are designed to manufacture. They can be very prominent and substantial, such as those found in cars. They can also be relatively small, such as batteries seen in some electrical children's vehicles that run in the front yard

5. BLUETOOTH HC05

It is used for many applications like wireless headset, game controllers, wireless mouse, wireless keyboard, and many more consumer applications.

It has range up to <100m which rely upon transmitter and receiver, atmosphere, geographic & urban conditions.

It is IEEE 802.15.1 standardized protocol, through which one can build wireless Personal Area Network (PAN). It uses frequency-hopping spread spectrum (FHSS) radio technology to send data over air.

It uses serial communication to communicate with devices. It communicates with microcontroller using serial port (USART).

.

6. MOTOR DRIVER

Double H driver module uses ST L298N dual full-bridge driver, an integrated monolithic circuit in a 15- lead Multiwatt and PowerSO20 packages.

It is a high voltage, high current dual full-bridge driver designed to accept standard TTL logic levels and drive inductive loads such as relays, solenoids, DC and stepping motors.This motor driver module controls the speed and direction on 2 DC motors, up to 40V 3A.The module itself is generated and controlled from a gadget main board but the motors are controlled from a separate power source. It straightly controls Stepper Motor or DC Motor.

C)Software required

An Embedded system is an application that has at most one programmed computer(typically in the form of a microcontroller, a microprocessor or digital signal processor chip) and which is used by own users who are, in the main usage.

IV)RESULT AND CONCLUSION

This design of Fire Quenching Robot helps to share out the implication of fire handlers in firefighting task. Our project aims to build a real time firefighting robot which moves in a continous speed, locate the fire and then quench it with the help of draining mechanism. The observation and extinguishing was done with the help basic hardware components devoted with the robot. First and foremost, IR Flame sensors are used for the quench of fire. Secondly, BO Motors and Rubber wheels are used to traverses the robot to reach the fireplace. Finally, the robot quenches the fire with the help of under water pump and servo motors.

Fire Quenching Robot has developed to decrease the human life lost and to improve this device which spontaneously feel the fire and quench the fire without any human interruption.

In the factories, if any fire disaster occurs, there is a need of person to monitor spontaneously and correct it. In this process if any time hold takes place uncoverable loss occurs in Industries.

The firefighting robot continuously sense the environment and helps in quenching the fire

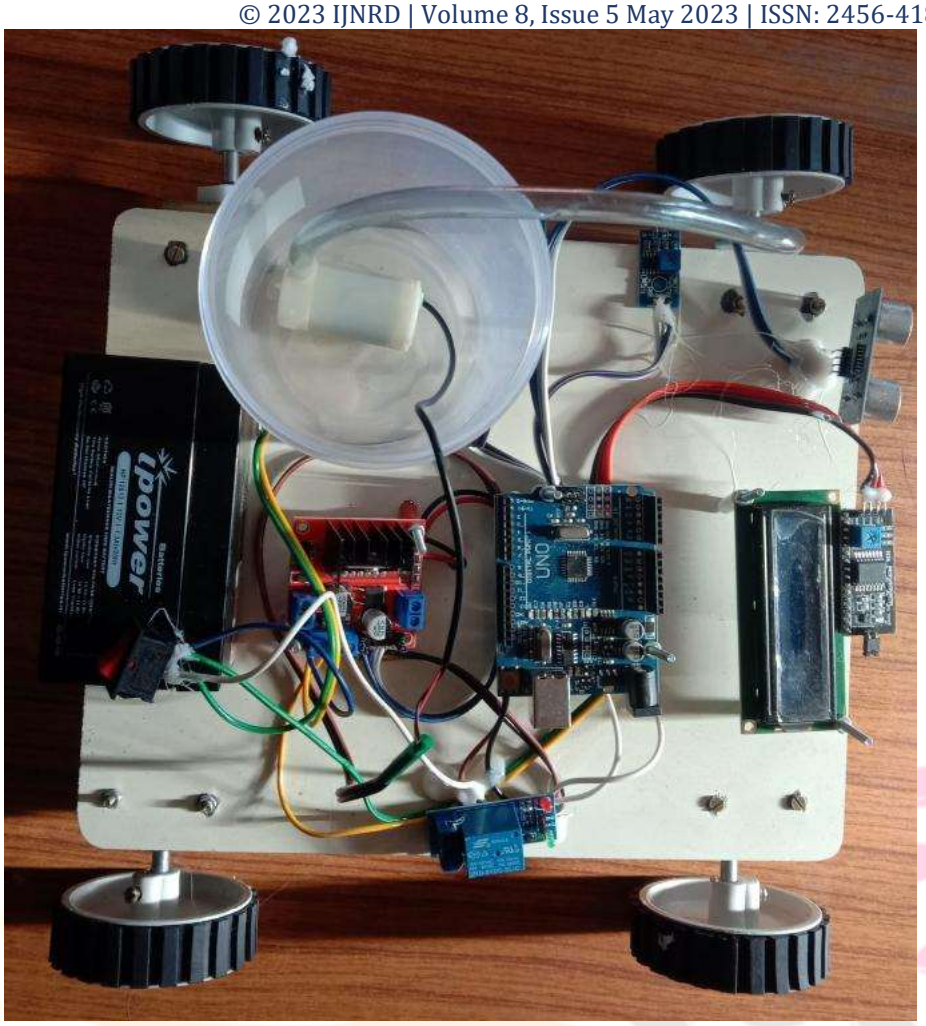

Fig 4 Proposed System

V) FUTURE ENHANCEMENT

The fire fighting Robot will have future opportunity so that it can work with fire fighters, which it decrease the risk of harm to sufferer .It is an creative work in the field of Robotics so that it handled towards a responsible and obtainable access to save the lives and safeguards the danger to property.

It can be improved to a real fire quencher by replacing the water carrier by a carbon-di-oxide carrier and by making it to quench the fires of the whole room using micro controller programming

Also the robot could not be activate through the batteries due to some conditions the current requirement for the circuit improves about 0.8A which is very much high and cannot be obtained using batteries.

V.REFERENCES

[1] Tawfiqur Rakib, M. A. Rashid Sarkar, “Design and fabrication of an autonomous firefighting robot with multi sensor fire detection using PID controller”, ICIEV Volumn 23 issue-1 JUNE 2016.

[2] SaravananP. ,SoniIshawarya, "Android controlled intergrated semi-autonomous firefighting robot", Ineternational journal of innovative science Engg. and Technology 2015.

[3] S. JakthiPriyanka,R. Sangeetha, "Android controlled firefighting robot",Ineternational journal of innovative science Engg. and Technology ,Volumn 3, 2017.

[4] Nagesh MS, Deepika T V , Stafford Michahial, Dr M Shivakumar, "Fire Extinguishing Robot", International Journal of Advanced Research in Computer and Communication Engineering,Vol. 5, Issue 12, December 2016 .

[5] SushrutKhajuria, RakeshJohar, Varenyam Sharma, Abhideep Bhatti, " Arduino Based Fire Fighter Robot",International Journal of Scientific Engineering and Research (IJSER),Volume 5 Issue 5, May 2017

[6] Khaled Sailan, Prof.Dr.Ing. Klaus- Dieter Kuhnert "Obstacle avoidance stratergy using fuzzy logic steering control of amphibious autonomous vehicle", International journal of innovative science Engg. and Technology ,Volumn 2, 2015

[7] J Jalani1 , D Misman1 , A S Sadun1 and L C Hong1,"Automatic fire fighting robot with notification",IOP Conference Series: Materials Science and Engineering, Volume 637, The 3rd International Conference on Robotics and Mechantronics (ICRoM 2019) 9–11 August 2019, Sabah, Malaysia

[8] H. Anandakumar and K. Umamaheswari, A bio-inspired swarm intelligence techniquefor social aware cognitive radio handovers, Computers & Electrical Engineering, vol. 71, pp. 925-937, Oct. 2018.

[9] R. Arulmurugan and H. Anandakumar, Early Detection of Lung Cancer Using WaveletFeature Descriptor and Feed Forward Back Propagation Neural Networks Classifier, Lecture Notes in Computational Vision and Biomechanics, pp. 103-110, 2018.

[10] Nagesh M S, Deepika T V, Stafford Michahial, and Dr. M Shivakumar,Fire Extinguishing Robot, International Journal of Advanced Research in Computer and Communication Engineering, 5(12), December 2016.