IJNRD.ORG ISSN : 2456-4184
INTERNATIONAL JOURNAL OF NOVEL RESEARCH AND DEVELOPMENT (IJNRD) | IJNRD.ORG
An International Open Access, Peer-reviewed, Refereed Journal

DESIGN THINKING ON SMART VEHICLE ACCIDENT DETECTOR

Dr.SIVASANKARI B[1], DHANUSH S M[2], ILLAMPARUTHI G[3], ABISHAK K R[4], AKASH S[5],

PROFESSOR [1] , [1, 2,3,4,5] ELECTRONICS AND COMMUNICATION ENGINEERING,

[1,2,3,4,5]SNS COLLEGE OFN TECHNOLOGY, COIMBATORE, TAMIL NADU, INDIA.

ABSTRACT(EMAPATHY)— We humans often travel from one place to another for various reasons. One of the important mode of transport is via road. Nowadays the cars are no longer a means of luxury but rather a 'need' for transportation. Day in and day out, even for shorter distances we tend to use our cars. Through the recent years, accidents are increased due the increase in the vehicles on road. Further the new generation of cars have emerged which are meant to reduce the accidents caused. However, despite the implementation of innovative ideas to reduce accidents in the modem cars. There are still chances of occurrence of accidents. It is of a greater importance to reduce the number of accidents cases and to protect human lives. One of the major reasons for the loss of lives is the delay of medical treatment of the injured person. Due to the ignorance of the people, help to the injured person is delayed thereby costing their lives. As the technology advances, the need for providing a more reliable system for helping the people increases. Thus we have designed a system using GSM, GPS and smart sensors to accurately send SMS to the nearby hospitals and to the family member of the injured person when accident takes place.

Keywords—Accident, GSM, GPS, SMS

I. INTRODUCTION

As vehicles are modernized these days' accidents also increased. Some of the accident spot are informed and they're rescued but in remote area if Accidents occurs information can't be properly informed. So we proposed a new system in which now its initialized only in cars. When accident occurs cars air bag opens when there is certain pressure observed by crash sensor. In that system we fixed a transmitter device. When accident

occurs crash sensor gives output as 1 this output goes to our system and it understands that it was an accident it automatically delivers the information to the Nearest ambulance, Police station and to their reputed families. By these probabilities of any one can notice this information and the rescue team can be on time to save the person.

II. THE IDEATE

This project main goal to reduce the late rescue dead in several places and to do proper information about the accident to reduce the inconvenience of the accident by this everyone can know about the accidents. This project helps many lives in remote place accidents by saving in time.

III. PROTOTYPE

The smart vehicle accident detector consists of Esp8266 inbuilt Wi-Fi module which is the main part of this project which helps to transfer the information and then the crash sensor which senses the pressure and give output when accident is occurred and the power source for the system is distributed by LM7805 which gives constant 5v power supply to the device and finally led indications for the system is on and led for when crash sensor output is detected. The VIN pin of Esp8266 is connected with Lm7805 output, the ground pin of Lm7805 is connected with GND of Esp8266 and the sensor output in connected with D1 pin of Esp8266.

IV. CIRCUIT

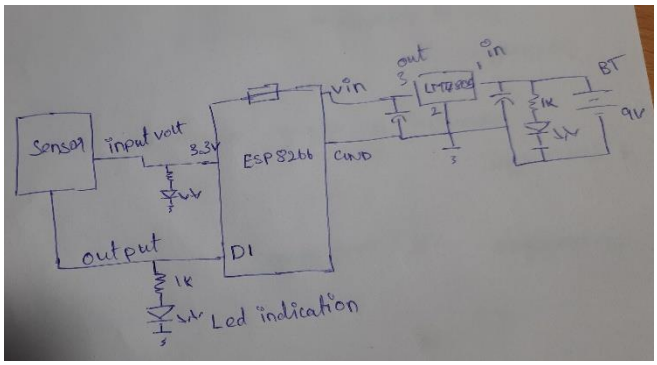

Figure 1: circuit diagram

V. TESTING AND OUTPUT IMAGE

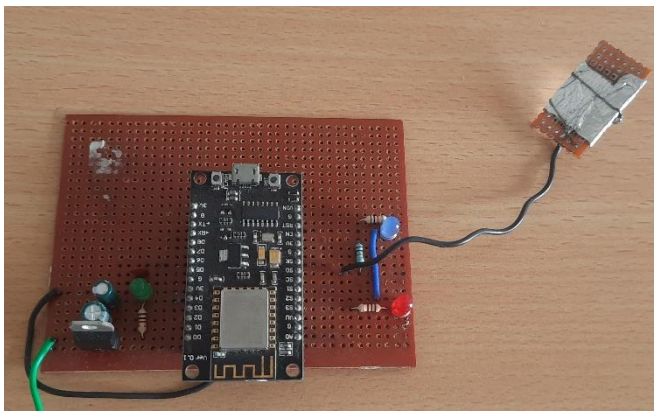

Figure 2: output images of application

.

VI. CONCLUSION

As the system we have proposed it should be installed in vehicle to avoid miss communication late rescue and to inform about the accident spot to the nearest ambulance, Police station and to their reputed families by these there's a probability of at least any one of them can notice the spot.

VII. REFERENCE

1. *Bankar Sanket Anil, Kale Aniket Vilas and S.R. Jagtap, "Intelligent System For Vechicular Accident Dectection and Notification", International Conference on Communication and Signal Processing, 2014.*
2. *Amit Meena, Srikrishna Iyer, Monika Nimje, Saket JogJekar, Sachin Jagtap and Mujeeb Rahman, "Automatic Accident Detection and Reporting Framework for Two Wheelers", 2014 IEEE International Conference on Advanced Communication Control and Computing Technologies (ICACCCT).*
3. *T. Nirav, V. Tanmay and S. Divyang, "Automatic Vehicle Accident Detection System Based on ARM and GPS", International Journal for Research in Technological Studies (IJRTS), vol. 1, no. 1, Dec 2013.*
4. *Akshay Agrawal, Anand Khinvasara, Mitali Bhokare, Sumit Kaulkar and Y. K. Sharma, "Accident Detection System Application", International Journal of Emerging Technologies in Computational and Applied Sciences, pp. 425-428, September-November 2013.*
5. *D. Singh and C. K. Mohan, "Deep spatio-temporal representation for detection of road accidents using stacked auto encoder", IEEE Transactions on Intelligent Transportation Systems, vol. 20, no. 3, pp. 879-887, March 2019.*